Cover Page

History:
1. Rev A – Initial release.
2. Rev B – Fixed Camera/Display, naming and position.
3. Rev C – Added Polycom Touch Control and Eagle Eye III

ATX 200/300/400

System Wiring Specification

Polycom Telepresence Engineering

Document Number: 3823-30099-002

Revision: C

TOC:

1. Cover Page
2. A/V and Control Block Diagram
3. Network and Power Block Diagram
4. A/V and Control Wiring Detail
5. Network and Power Wiring Detail
6. Table Wiring Detail
7. Component/Cable Reference
8. Document Camera Kit Wire Diagram

THESE DRAWINGS AND SPECIFICATIONS ARE THE EXCLUSIVE PROPERTIES OF POLYCOM CORPORATION, ISSUED IN STRICT CONFIDENCE AND SHALL NOT, WITHOUT THE PRIOR WRITTEN PERMISSION OF POLYCOM CORPORATION BE REPRODUCED, COPIED, OR USED FOR ANY PURPOSE WHATSOEVER EXCEPT THE MANUFACTURE OF ARTICLES FOR POLYCOM CORPORATION.

MATERIAL/FINISH NOTED AS APPLICABLE

THIRD ANGLE PROJECTION

APPROVALS	DATE
DRAWN BY shamdi	5-Oct-10
REVISED BY shamdi	24-Jun-11
APPVD	
APPVD	

POLYCOM®

TITLE: System Wiring Specification ATX 200/300/400

SIZE	DIVISION	DWG. NO.	REV.
B	TELEPRESENCE	3823-30099-002	C

SCALE: NTS | DO NOT SCALE DRAWING | SHEET 1 OF 8

A/V and Control Block Diagram

- *ATX 400 shown.*
- *For ATX 300 remove Left Display, Left Codec, and Left Camera, and all associated connections.*
  Camera Positions:
  - *Primary Camera on top of Primary Display.*
  - *Secondary Camera on top of Right Display.*
  - *Right Camera on top of Secondary Display*
- *For ATX 200 also remove Right Display, Right Codec, and Right Camera, and all associated connections.*
  Camera Positions:
  - *Primary Camera on top of Secondary Display.*
  - *Secondary Camera on top of Primary Display.*

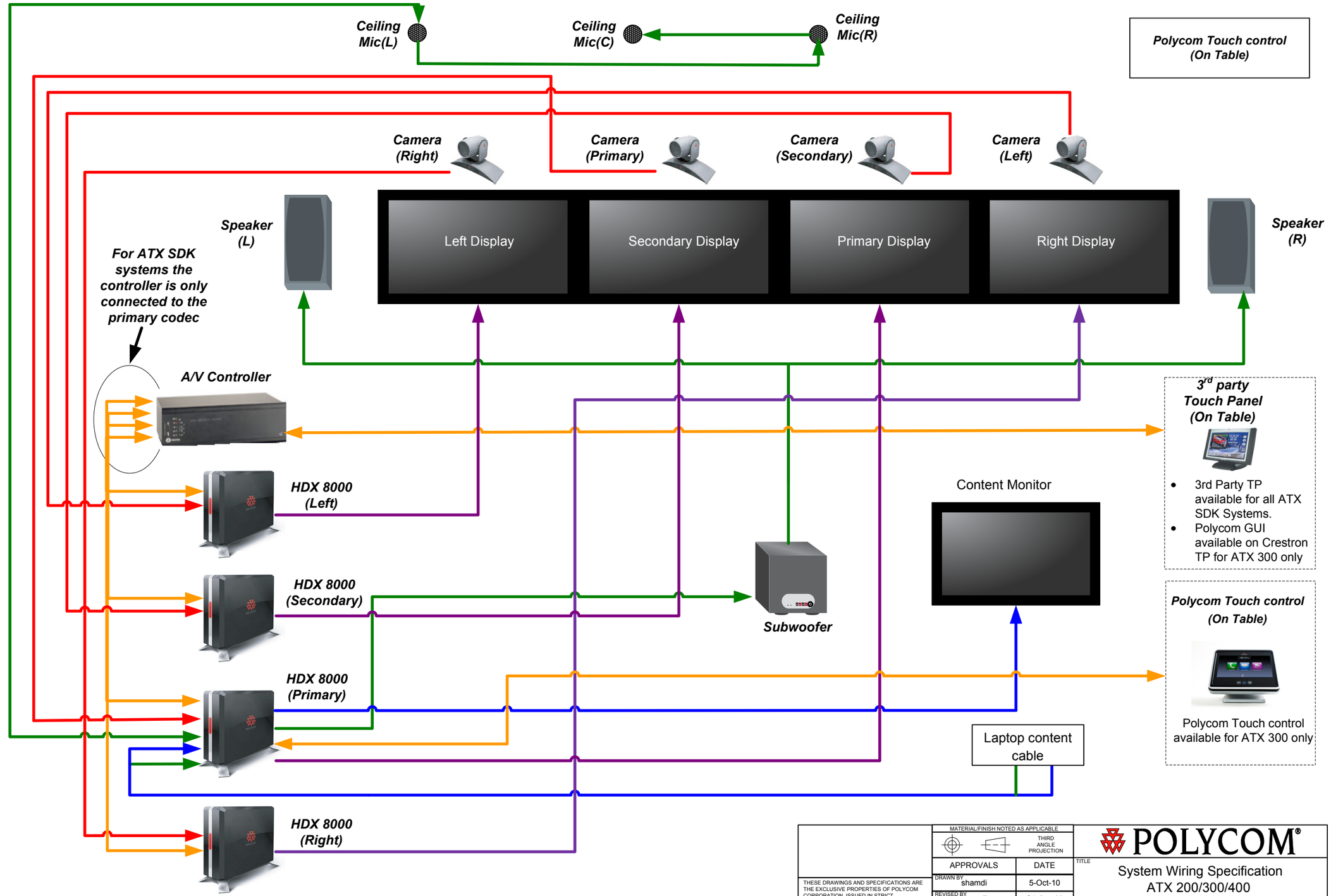

THESE DRAWINGS AND SPECIFICATIONS ARE THE EXCLUSIVE PROPERTIES OF POLYCOM CORPORATION, ISSUED IN STRICT CONFIDENCE AND SHALL NOT, WITHOUT THE PRIOR WRITTEN PERMISSION OF POLYCOM CORPORATION BE REPRODUCED, COPIED, OR USED FOR ANY PURPOSE WHATSOEVER EXCEPT THE MANUFACTURE OF ARTICLES FOR POLYCOM CORPORATION.

MATERIAL/FINISH NOTED AS APPLICABLE

THIRD ANGLE PROJECTION

APPROVALS	DATE
DRAWN BY shamdi	5-Oct-10
REVISED BY shamdi	24-Jun-11
APPVD	
APPVD	

POLYCOM®

TITLE: System Wiring Specification ATX 200/300/400

SIZE	DIVISION	DWG. NO.	REV
B	TELEPRESENCE	3823-30099-002	C

SCALE: NTS | DO NOT SCALE DRAWING | SHEET 2 OF 8

Network and Power Block Diagram

- *ATX 400 shown.*
- *For ATX 300 remove Left Display, Left Codec, and Left Camera, and all associated connections. Camera Positions:*
  - *Primary Camera on top of Primary Display.*
  - *Secondary Camera on top of Right Display.*
  - *Right Camera on top of Secondary Display*
- *For ATX 200 also remove Right Display, Right Codec, and Right Camera, and all associated connections. Camera Positions:*
  - *Primary Camera on top of Secondary Display.*
  - *Secondary Camera on top of Primary Display.*

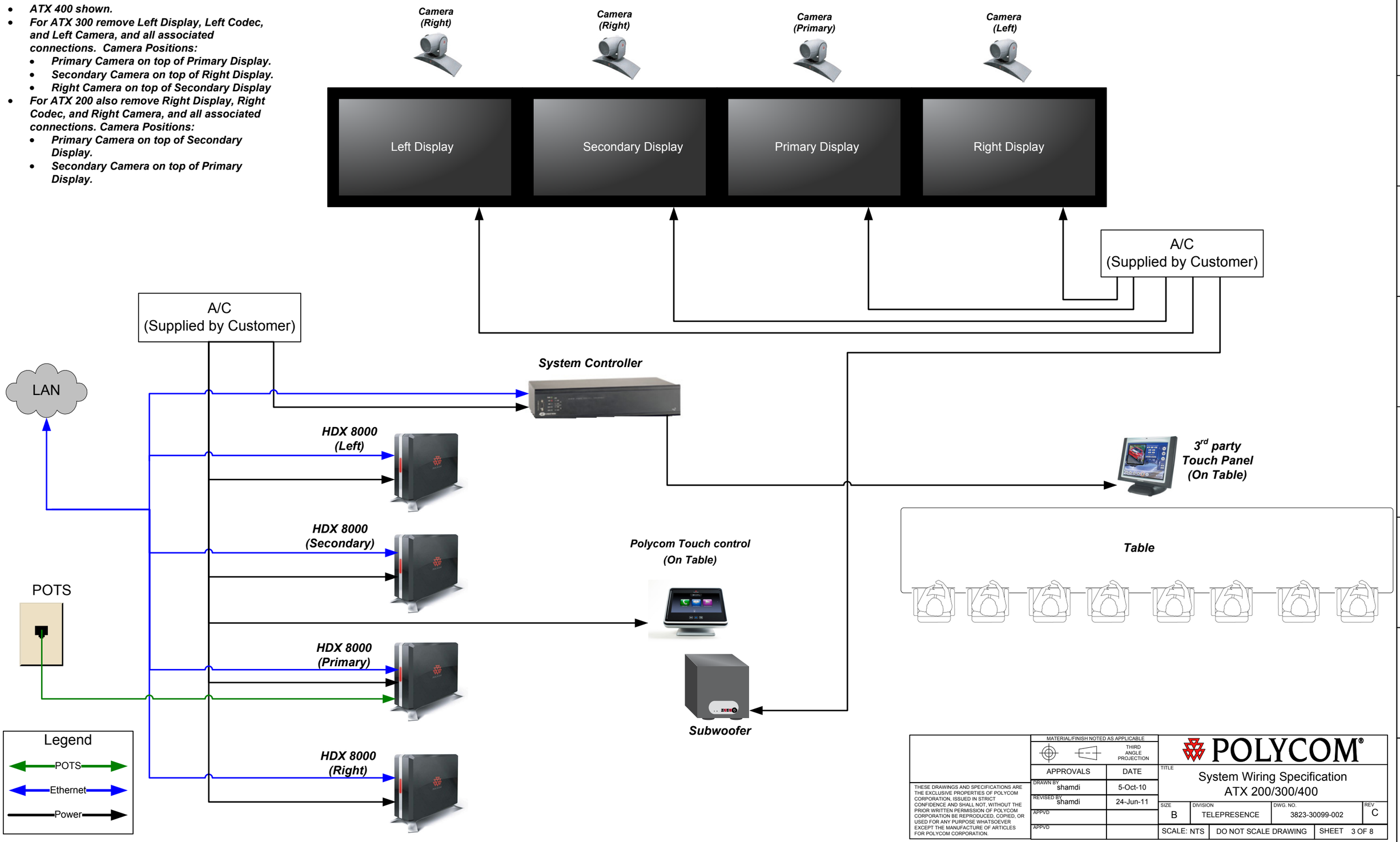

MATERIAL/FINISH NOTED AS APPLICABLE	THIRD ANGLE PROJECTION	POLYCOM®
APPROVALS	DATE	TITLE: System Wiring Specification ATX 200/300/400
DRAWN BY shamdi	5-Oct-10	
REVISED BY shamdi	24-Jun-11	SIZE B · DIVISION TELEPRESENCE · DWG. NO. 3823-30099-002 · REV C
APPVD		
APPVD		SCALE: NTS · DO NOT SCALE DRAWING · SHEET 3 OF 8

THESE DRAWINGS AND SPECIFICATIONS ARE THE EXCLUSIVE PROPERTIES OF POLYCOM CORPORATION, ISSUED IN STRICT CONFIDENCE AND SHALL NOT, WITHOUT THE PRIOR WRITTEN PERMISSION OF POLYCOM CORPORATION BE REPRODUCED, COPIED, OR USED FOR ANY PURPOSE WHATSOEVER EXCEPT THE MANUFACTURE OF ARTICLES FOR POLYCOM CORPORATION.

A/V and Control Wiring Detail

- *ATX 400 shown.*
- *For ATX 300 remove Left Display, Left Codec, and Left Camera, and all associated connections. Camera Positions:*
  - *Primary Camera on top of Primary Display.*
  - *Secondary Camera on top of Right Display.*
  - *Right Camera on top of Secondary Display*
- *For ATX 200 also remove Right Display, Right Codec, and Right Camera, and all associated connections. Camera Positions:*
  - *Primary Camera on top of Secondary Display.*
  - *Secondary Camera on top of Primary Display.*

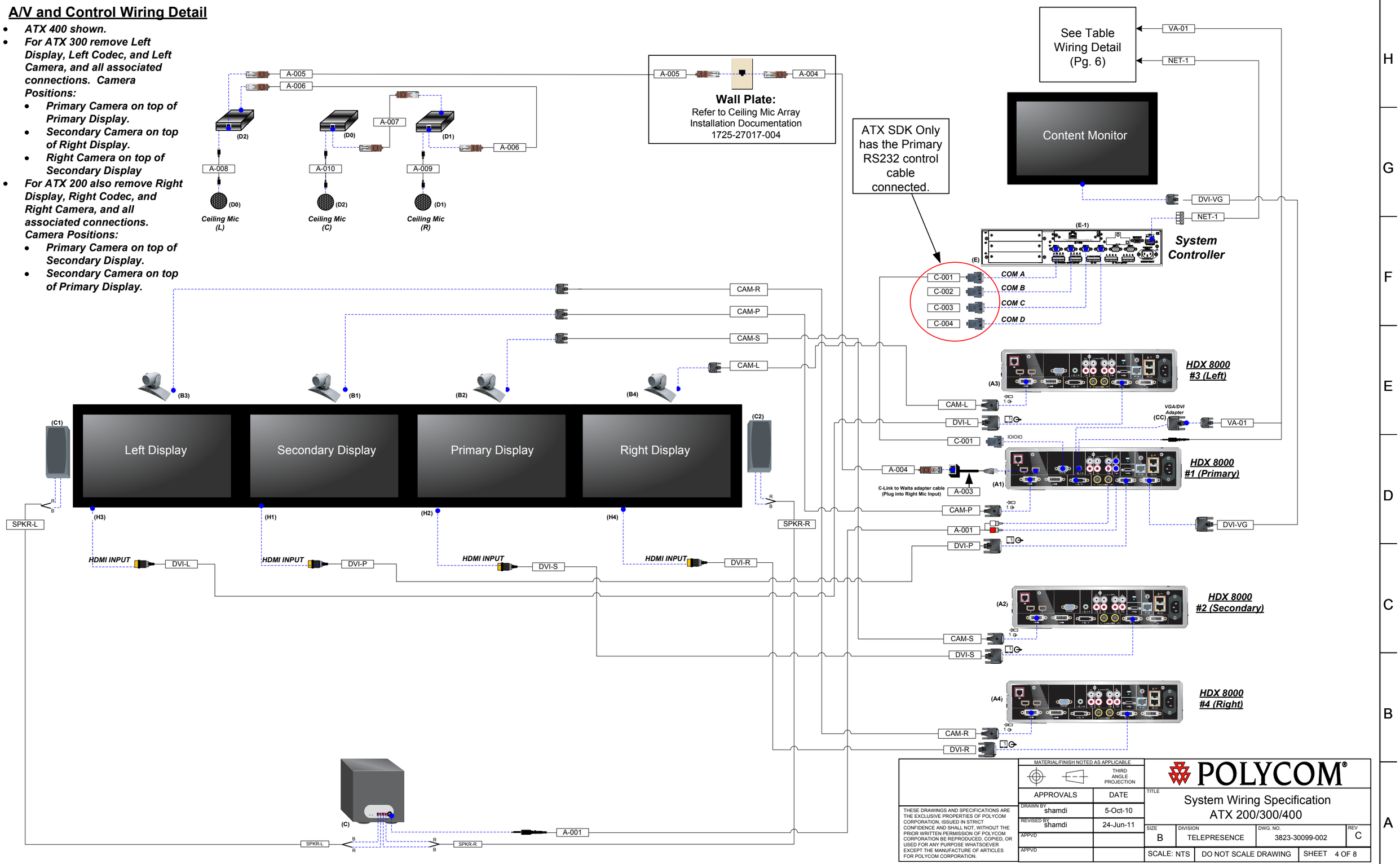

THESE DRAWINGS AND SPECIFICATIONS ARE THE EXCLUSIVE PROPERTIES OF POLYCOM CORPORATION, ISSUED IN STRICT CONFIDENCE AND SHALL NOT, WITHOUT THE PRIOR WRITTEN PERMISSION OF POLYCOM CORPORATION BE REPRODUCED, COPIED, OR USED FOR ANY PURPOSE WHATSOEVER EXCEPT THE MANUFACTURE OF ARTICLES FOR POLYCOM CORPORATION.

MATERIAL/FINISH NOTED AS APPLICABLE

THIRD ANGLE PROJECTION

APPROVALS	DATE
DRAWN BY shamdi	5-Oct-10
REVISED BY shamdi	24-Jun-11
APPVD	
APPVD	

POLYCOM®

TITLE: System Wiring Specification ATX 200/300/400

SIZE	DIVISION	DWG. NO.	REV
B	TELEPRESENCE	3823-30099-002	C

SCALE: NTS | DO NOT SCALE DRAWING | SHEET 4 OF 8

Network and Power Wiring Detail

- *ATX 400 shown.*
- *For ATX 300 remove Left Display, Left Codec, and Left Camera, and all associated connections. Camera Positions:*
  - *Primary Camera on top of Primary Display.*
  - *Secondary Camera on top of Right Display.*
  - *Right Camera on top of Secondary Display*
- *For ATX 200 also remove Right Display, Right Codec, and Right Camera, and all associated connections. Camera Positions:*
  - *Primary Camera on top of Secondary Display.*
  - *Secondary Camera on top of Primary Display.*

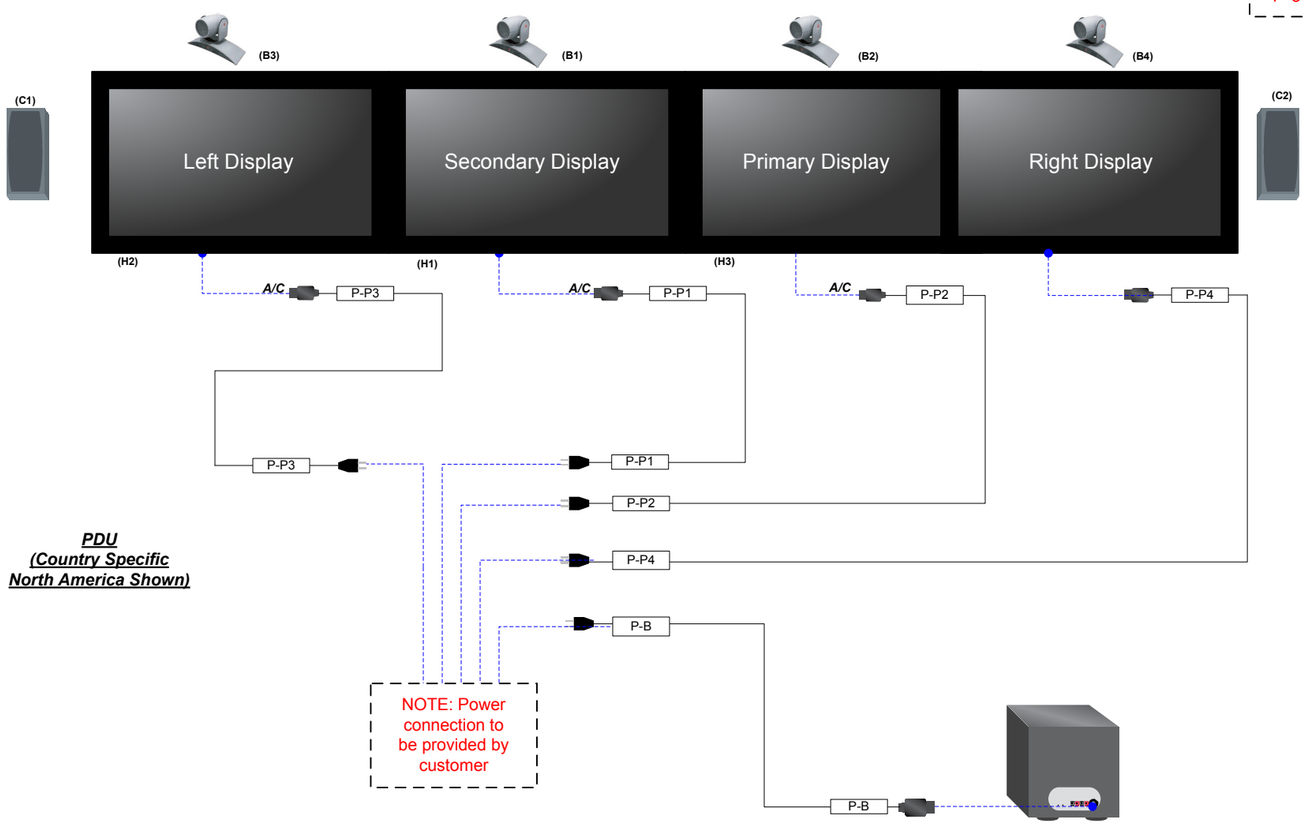

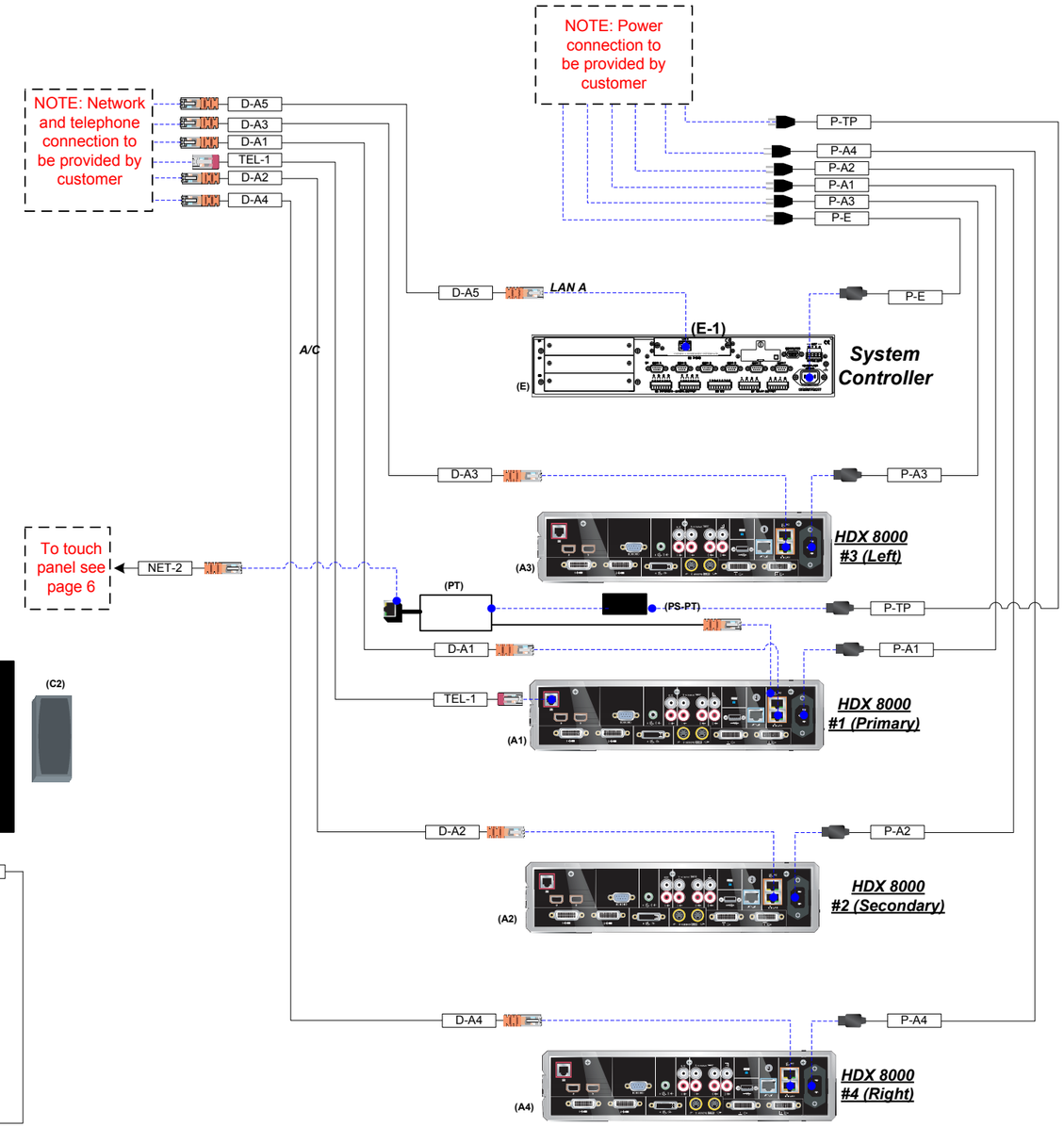

THESE DRAWINGS AND SPECIFICATIONS ARE THE EXCLUSIVE PROPERTIES OF POLYCOM CORPORATION, ISSUED IN STRICT CONFIDENCE AND SHALL NOT, WITHOUT THE PRIOR WRITTEN PERMISSION OF POLYCOM CORPORATION BE REPRODUCED, COPIED, OR USED FOR ANY PURPOSE WHATSOEVER EXCEPT THE MANUFACTURE OF ARTICLES FOR POLYCOM CORPORATION.

MATERIAL/FINISH NOTED AS APPLICABLE

THIRD ANGLE PROJECTION

APPROVALS	DATE
DRAWN BY shamdi	5-Oct-10
REVISED BY shamdi	24-Jun-11
APPVD	
APPVD	

POLYCOM®

TITLE: System Wiring Specification ATX 200/300/400

SIZE	DIVISION	DWG. NO.	REV.
B	TELEPRESENCE	3823-30099-002	C

SCALE: NTS | DO NOT SCALE DRAWING | SHEET 5 OF 8

Table Wiring Detail

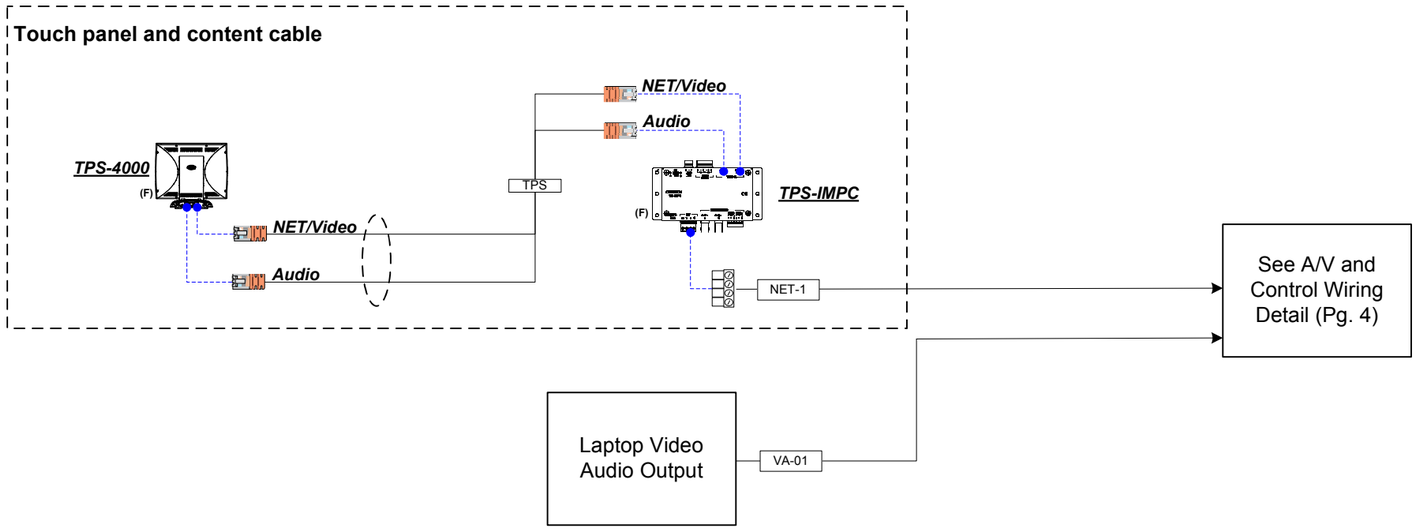

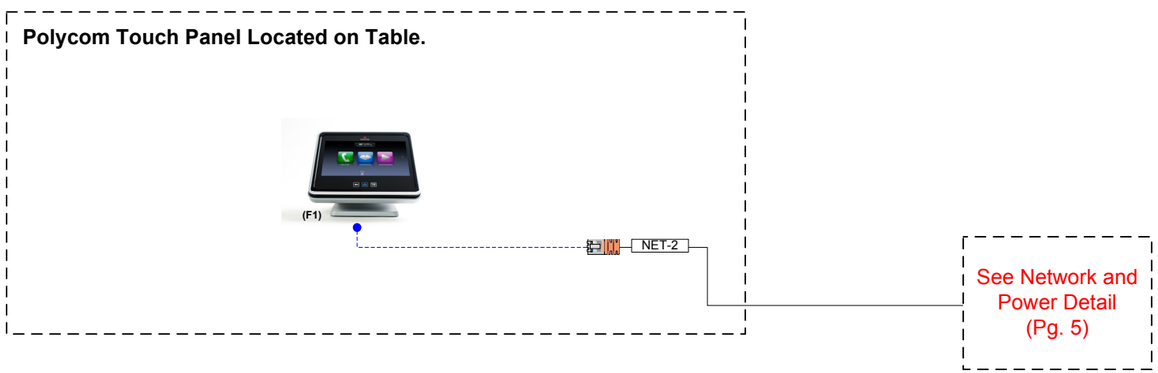

THESE DRAWINGS AND SPECIFICATIONS ARE THE EXCLUSIVE PROPERTIES OF POLYCOM CORPORATION, ISSUED IN STRICT CONFIDENCE AND SHALL NOT, WITHOUT THE PRIOR WRITTEN PERMISSION OF POLYCOM CORPORATION BE REPRODUCED, COPIED, OR USED FOR ANY PURPOSE WHATSOEVER EXCEPT THE MANUFACTURE OF ARTICLES FOR POLYCOM CORPORATION.

MATERIAL/FINISH NOTED AS APPLICABLE

THIRD ANGLE PROJECTION

APPROVALS	DATE
DRAWN BY shamdi	5-Oct-10
REVISED BY shamdi	24-Jun-11
APPVD	
APPVD	

POLYCOM®

TITLE: System Wiring Specification ATX 200/300/400

SIZE	DIVISION	DWG. NO.	REV.
B	TELEPRESENCE	3823-30099-002	C

SCALE: NTS | DO NOT SCALE DRAWING | SHEET 6 OF 8

Component/Cable Reference

Ref			PLCM P/N	Part Desc	Qty			MFG Name	Model Name	MFG P/N	Description
SDK 200	ATX/SDK 300	SDK 400			SDK 200	ATX/SDK 300	SDK 400				
Electronic Components											
A1 - A2	A1 - A3	A1 - A4	2215-27952-001	ASSY,BASE BOX,HDX 8000,NTSC	2	3	4	Polycom	HDX 8000	2215-23358-001	HD Videoconferencing Engine
B1 - B2	B1 - B3	B1 - B4	1624-61803-001	CAM,MPTZ,EAGLEEYE III,BLK	2	3	4	Polycom	MPTZ-9	1624-61803-001	Eagle Eye III 1080 Camera Black
C			Supplied by Customer	SPKR,SUBWFR/AMP,270W,120V,w/FT	1			Supplied by Customer	Supplied by Customer	Supplied by Customer	Subwoofer
C1-C2			Supplied by Customer	SPKR,SATELLITE,150W,MC155,BLK	2			Supplied by Customer	Supplied by Customer	Supplied by Customer	Satellite Speakers
D0			2215-26927-001	ASSY,CEILING,MIC3,WHITE	1			Polycom	Celing Microphone	2215-26927-001	Ceiling mic kit (white)
D1, D2			2215-26928-001	ASSY,CEILING,MIC3,WHT,EXT	2			Polycom	Celing Microphone	2215-26928-001	Ceiling mic extension kit (White)
H1 - H2	H1 - H3	H1 -H4	Supplied by Customer	Supplied by Customer	2	3	4	Supplied by Customer	Supplied by Customer	Supplied by Customer	1080p Display
CC			Supplied by Customer	Supplied by Customer	1			Supplied by Customer	Supplied by Customer	Supplied by Customer	DVI to VGA Adapter
Cables											
A-001			Supplied by Customer	Supplied by Customer	1			Supplied by Customer	Supplied by Customer	Supplied by Customer	Dual RCA to mini stereo audio cable
A-003			2457-25646-001	ASSY,CBL,CLINK2,ADAPTER	1			Polycom	2457-25646-001	2457-25646-001	Clink to Walta adapter for ceiling mic
A-004			2457-24011-001	CBL,RJ45,10',CM2,MICA	1			Polycom	N/A	N/A	Ceiling mic cable (10')
A-005			2457-24008-001	CBL,RJ45,50',PLENUM,CM2,MICA	1			Polycom	N/A	N/A	Ceiling mic cable (50')
A-006, A-007			2457-24009-001	CBL,RJ45,25',PLENUM,CM2,MICA	2			Polycom	N/A	N/A	Ceiling mic cable (25')
A-008 - A-010			2457-23986-002	ASSY,CBL,CM2,609.6MM(24")	3			Polycom	N/A	N/A	Mini XLR mic cable
CAM-P,CAM-S	CAM-P,CAM-S,CAM-R	CAM-P,CAM-S,CAM-R,CAM-L	2457-23180-010	CBL,HDCI,ANALOG HI-RES 10 MTR	2	3	4	Polycom	2457-23180-010	2457-23180-010	Eagle Eye III camera cable (10m)
D-A1 - D-A3	D-A1 - D-A4	D-A1 - D-A5	Supplied by Customer	Supplied by Customer	4			Supplied by Customer	Supplied by Customer	Supplied by Customer	CAT. 6 snag less patch cable
P-A1 - P-A3	P-A1 - P-A4	P-A1 - P-A5	1457-24587-001	CBL,ASSY,PWR,6 FT	3	4	5	Markertek	POWER-6	POWER-6	6ft power cord
P-B			Supplied by Customer	Supplied by Customer	1			Supplied by Customer	Supplied by Customer	Supplied by Customer	Use cord supplied with product
P-P1 - P-P2	P-P1 - P-P3	P-P1 - P-P4	Supplied by Customer	Supplied by Customer	2	3	4	Supplied by Customer	Supplied by Customer	Supplied by Customer	Use cord supplied with product
SPKR-L, SPKR-R			N/A	N/A	2			Polycom	N/A	N/A	Speaker wire (incl'd w/subwoofer kit)
TEL-1			Supplied by Customer	Supplied by Customer	1			Supplied by Customer	Supplied by Customer	Supplied by Customer	Phone cord
VA-01			1457-27132-001	CBL,VGA MM,MICRO,AUDIO,25 FT	1			Extron	MVGA-AM-M/25	26-566-04	25' VGA cord w/audio
DVI-P, DVI-S	DVI-P, DVI-S, DVI-R	DVI-P, DVI-S,DVI-L, DVI-R	Supplied by Customer	Supplied by Customer	2	3	4	Supplied by Customer	Supplied by Customer	Supplied by Customer	DVI to HDMI cable
DVI-VG			Supplied by Customer	Supplied by Customer	1			Supplied by Customer	Supplied by Customer	Supplied by Customer	DVI-A(M) to HD15(M) Cable
3rd Party Control System (ATX 300, SDK 200/300/400) Supplied by Customer											
E			Supplied by Customer	Supplied by Customer	1			Crestron	AV2	AV2	Control System Master
E-1			Supplied by Customer	Supplied by Customer	1			Crestron	C2ENET-1	C2ENET-1	Ethernet card for master controller
F			Supplied by Customer	Supplied by Customer	1			Crestron	TPS-4000	TPS-4000	10" touch panel with TPS-IMPC interface and cable
C-001	C-001 - C-003/C-001	C-001	1457-24591-001	CBL,ASSY,RPX,NULL,5FT	1	3 / 1	1	L-Com	CSNULL9FF-5A	CSNULL9FF-5A	5ft null modem (F-F)
NET-1			2457-24713-001	CBL,ASSY,RPX,200,CRESTNET	1			Polycom	2457-24713-001	2457-24713-001	Crestnet cable
P-E			Supplied by Customer	Supplied by Customer	1			Supplied by Customer	Supplied by Customer	Supplied by Customer	Crestron power supply cable
Polycom Control System (ATX 300 only) Supplied by Customer											
E			Supplied by Customer	Supplied by Customer	1			Crestron	AV2	AV2	Control System Master
E-1			Supplied by Customer	Supplied by Customer	1			Crestron	C2ENET-1	C2ENET-1	Ethernet card for master controller
F1			2200-30070-001	Polycom Touch Control	1			Polycom	Polycom Touch Control	Polycom Touch Control	7" Touch Control with Stand
N/A	C-001 - C-003 / NA	N/A	1457-24591-001	CBL,ASSY,RPX,NULL,5FT	N/A	3 / N/A	N/A	L-Com	CSNULL9FF-5A	CSNULL9FF-5A	5ft null modem (F-F)
NET-2			2457-26994-001	CBL,LAN,CAT5E,5M	1			Polycom	2457-26994-001	2457-26994-001	5M CAT5E Cable
P-E			Supplied by Customer	Supplied by Customer	1			Supplied by Customer	Supplied by Customer	Supplied by Customer	Crestron power supply
PT			2457-40054-001	ASSY,CBL,PIC,SHLD,NOSHROUD,ONYX/RKPL	1			Polycom	2457-40054-001	2457-40054-001	PoE Power supply for Polycom Touch Control
PS-PT			1465-42740-003	PSU,48V/0.4A,45 DEGREE PLUG	1			Polycom	1465-42740-003	1465-42740-003	Power supply for PoE (PT)

THESE DRAWINGS AND SPECIFICATIONS ARE THE EXCLUSIVE PROPERTIES OF POLYCOM CORPORATION, ISSUED IN STRICT CONFIDENCE AND SHALL NOT, WITHOUT THE PRIOR WRITTEN PERMISSION OF POLYCOM CORPORATION BE REPRODUCED, COPIED, OR USED FOR ANY PURPOSE WHATSOEVER EXCEPT THE MANUFACTURE OF ARTICLES FOR POLYCOM CORPORATION.

MATERIAL/FINISH NOTED AS APPLICABLE

THIRD ANGLE PROJECTION

APPROVALS	DATE
DRAWN BY shamdi	5-Oct-10
REVISED BY shamdi	24-Jun-11
APPVD	
APPVD	

POLYCOM®

TITLE System Wiring Specification ATX 200/300/400

SIZE	DIVISION	DWG. NO.	REV.
B	TELEPRESENCE	3823-30099-002	C

SCALE: NTS | DO NOT SCALE DRAWING | SHEET 7 OF 8

Document Camera Kit Wire Diagram

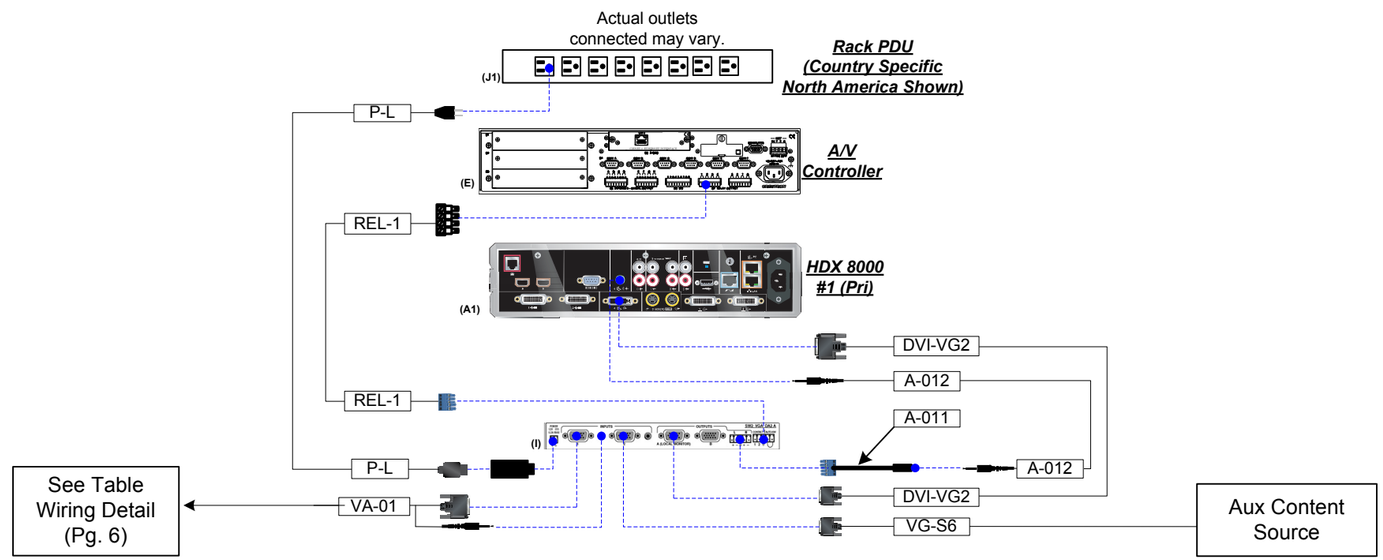

Label	Quantity	MFG Name	Model Name	Description
I	1	Extron	SW2 VGA DA2 A	2-port VGA switch/DA
REL-1	1	N/A	N/A	AV2 relay output 1 and 2 (See Note:1)
A-011	1	Extron	26-620-01	Phoenix to 3.5mm from VGA switch to Pri codec
A-012	1	N/A	N/A	1.5 M audio from VGA switch to Pri codec
DVI-VG2	1	N/A	N/A	5 Foot DVI-VGA from VGA switch to Pri codec
VG-S6	1	N/A	N/A	VGA cable
P-L	1	N/A	N/A	Extron SW2 Power Cord

Note 1:

REL-1 Wiring Diagram

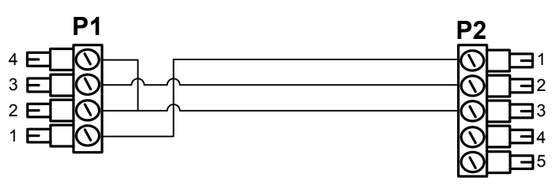

	P1		P2
Pin	1	to	1
Pin	2 & 4	to	3
Pin	3	to	2

P1 = 4 Pin Phoenix connector at Creston
P2 = 5 Pin Phoenix connector at
Extron SW2 VGA DA2 A

THESE DRAWINGS AND SPECIFICATIONS ARE THE EXCLUSIVE PROPERTIES OF POLYCOM CORPORATION, ISSUED IN STRICT CONFIDENCE AND SHALL NOT, WITHOUT THE PRIOR WRITTEN PERMISSION OF POLYCOM CORPORATION BE REPRODUCED, COPIED, OR USED FOR ANY PURPOSE WHATSOEVER EXCEPT THE MANUFACTURE OF ARTICLES FOR POLYCOM CORPORATION.

MATERIAL/FINISH NOTED AS APPLICABLE
THIRD ANGLE PROJECTION

APPROVALS	DATE
DRAWN BY shamdi	5-Oct-10
REVISED BY shamdi	24-Jun-11
APPVD	
APPVD	

POLYCOM®

TITLE: System Wiring Specification ATX 200/300/400

SIZE	DIVISION	DWG. NO.	REV
B	TELEPRESENCE	3823-30099-002	C

SCALE: NTS | DO NOT SCALE DRAWING | SHEET 8 OF 8